HORIZON 2020
The EU Framework Programme for Research and Innovation

CAPABLE

Cancer Patients Better Life Experience

Grant Agreement No. 875052
Start Date: 01/01/2020 (48 Months)

Deliverable No. 4.1

1st iteration of the Platform Proof Of Concept

Due Date: 31/12/2020
Submitted On: 31/12/2020

Coordinator	University of Pavia (UNIPV)
Deliverable Lead Partner	BIOMERIS (BIOM)
Contributing Partners	BIOM, UH, BIT, PUT, DEON, UNIPV, AMC
Contact	Prof. Silvana Quaglini
Email	silvana.quaglini@unipv.it
Website	www.capable-project.eu

Deliverable Type		
R	Document, report	
DEM	Demonstrator, pilot, prototype	**[X]**
DEC	Websites, patent fillings, videos etc.	
OTHER		
Dissemination Level		
PU	Public	**[X]**
CO	Confidential (Consortium members including the Commission Services)	
CI	Classified Information (Commission Decision 2015/444/EC)	

This deliverable is a part of a project receiving funding from the European Union's Horizon 2020 research and innovation programme under grant agreement No. 875052.

Table of Contents

1. Versions history 3
2. Executive summary 4
3. Scope of the demo 5
4. Scenario 7
   4.1. Day 0: Enrollment visit 7
   4.2. Day 0: Patient at home 9
   4.3. Day 1: Patient at home 11
   4.4. Day 2: Patient at home 12
   4.5. Day 3: Patient at home 13
5. Differences between this document and the recorded Demo 16
6. References 17

List of Figures

Figure 1. The CAPABLE overall architecture with components/interactions not involved in this demo grayed-out. 6
Figure 2. Day 0 - Enrollment visit - Part 1 7
Figure 3. Day 0 - Enrollment visit - Part 2 8
Figure 4. Day 0 - Enrollment visit - Sequence diagram 8
Figure 5. Day 0 - Patient at home 10
Figure 6. Day 0 - Patient at home - Sequence diagram 10
Figure 7. Day 1 - Patient at home 11
Figure 8. Day 1 - Patient at home - Sequence diagram 11
Figure 9. Day 2 - Patient at home 12
Figure 10. Day 2 - Patient at home - Sequence diagram 13
Figure 11. Day 3 - Patient at home 14
Figure 12. Day 3 - Patient at home - Sequence diagram 14

1.Versions history

Version	Date	Author	Comments
1.0	31/12/2020	Matteo Gabetta	

2. Executive summary

The aim of this deliverable is to support and provide context to the CAPABLE system demonstration video which is available at this link. A brief description about the scope of the demonstration is followed by a detailed description of the scenario that will be managed during the demo.

The demonstration video was recorded between December 9th and 16th 2020 by involved partners and faithfully reflects what was shown during the CAPABLE consortium meeting held on November 30th and December 2nd, 2020.

Given the decoupled nature of the CAPABLE architecture, the efforts that led to the realization of this demo are twofold: on the one hand, each involved partner carried out the development of the component under their own responsibility, on the other hand there was a global effort to make the different components communicate with each other. All these efforts have been coordinated by two Task Forces within the project: Task Force 1 focused on the development of the final CAPABLE architecture and Task Force 2, focused on the delivery of the specific demonstration.

3.Scope of the demo

The demonstration involves most of the components of the CAPABLE architecture given in Figure 1 and covers many interactions between them; in particular, the included components are as follows:

- Data Platform, storing and providing patient-level data
- Case Manager, managing events related to Data Platform and providing notifications to other components
- Knowledge-Data Ontology Mapper (KDOM), computing abstractions from data stored in Data Platform
- Patient's application (Patient GUI in Figure 1), providing user interface for patients
- Clinician's dashboard (Doctor GUI in Figure 1), providing user interface for physicians
- Deontics Engine, executing computer-interpretable clinical practice guidelines (CIGs) defined using the PROforma language
- GoCom Multimorbidity controller, checking for possible adverse interactions between clinical tasks for multimorbid patients and resolving them. Currently, it focuses on drug-drug interactions, but can be extended for other types of interactions involving non-clinical tasks (e.g., physical exercises).
- Physician DSS, providing guideline-based decision support for clinicians when managing cancer patients.
- Virtual Coach, providing coaching support combining clinical and non-clinical recommendations to cancer patients staying at home.

The Deontics Engine is used by both Physician DSS and Virtual Coach (more precisely, they use different instances of the Engine). Moreover, GoCom queries the Deontics Engine when checking for possible adverse interactions between tasks. Interactions between Deontics Engine and other components are handled by a web-based (REST) API. GoCom is invoked by Physician DSS and Virtual Coach -- in such case communication employs Data Platform and Case Manager.

Here we should note that Prediction Models (marked in gray in Figure 1) will be introduced later and have been omitted from the demonstration. Once they become available, they will be used by Physician DSS. They may be also employed by Virtual Coach for personalized recommendations.

All components, except the two user interfaces, have been effectively deployed in the premises made available by the partners responsible for their development; thus, all the interactions between these components that is shown in the demo are happening live between actual web services. Of course, the functionalities implemented by each component are partial and comply with the early stage of this demonstration.

The two user interfaces, following the development schedule of the responsible partner, are currently in the form of a mock-up, deployed through *InVision*, a digital product design platform.

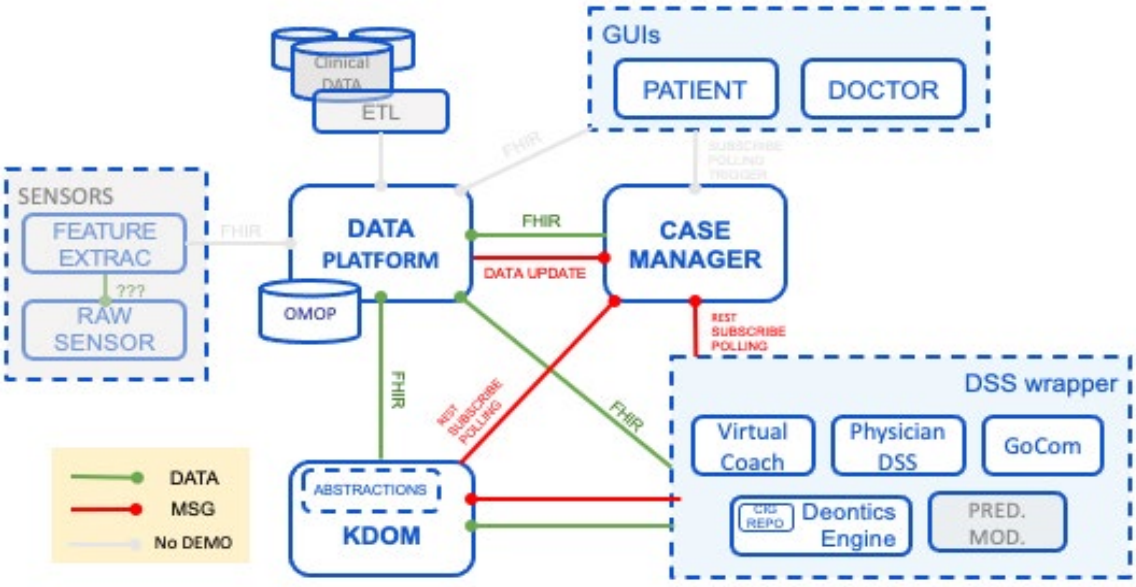

Figure 1. The CAPABLE overall architecture with components/interactions not involved in this demo grayed-out.

4.Scenario

The demo, designed together with clinicians involved in the project, addresses a single clinical guideline: the ESMO Diarrhea guideline [1]; it revolves around a prototypical fictional patient named Maria.

Maria is 66 years old and she's affected by renal cell carcinoma; apart from her main diagnosis, Maria has no significant clinical history except for a reported insomnia problem. The demo follows Maria during the first three days of using the CAPABLE system, starting from the enrollment visit (day 0).

In the following sections all the details about what happens in the demo are reported.

4.1. Day 0: Enrollment visit

A high-level overview of the enrollment visit, including collected data, is given in Figure 2 and 3. Moreover, a sequence diagram illustrating interactions between relevant CAPABLE components is given in Figure 4. Please note that for brevity Deontics Engine is not included in this sequence diagram and the subsequent ones.

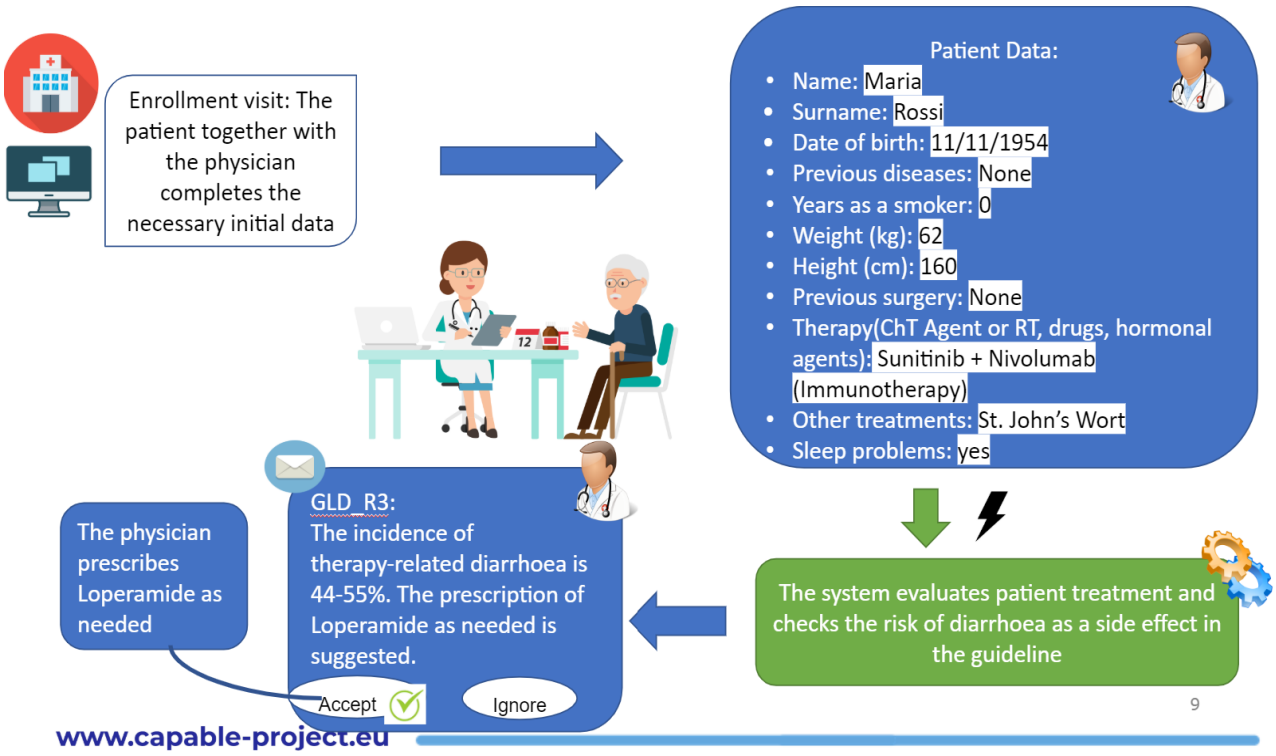

Figure 2. Day 0 - Enrollment visit - Part 1

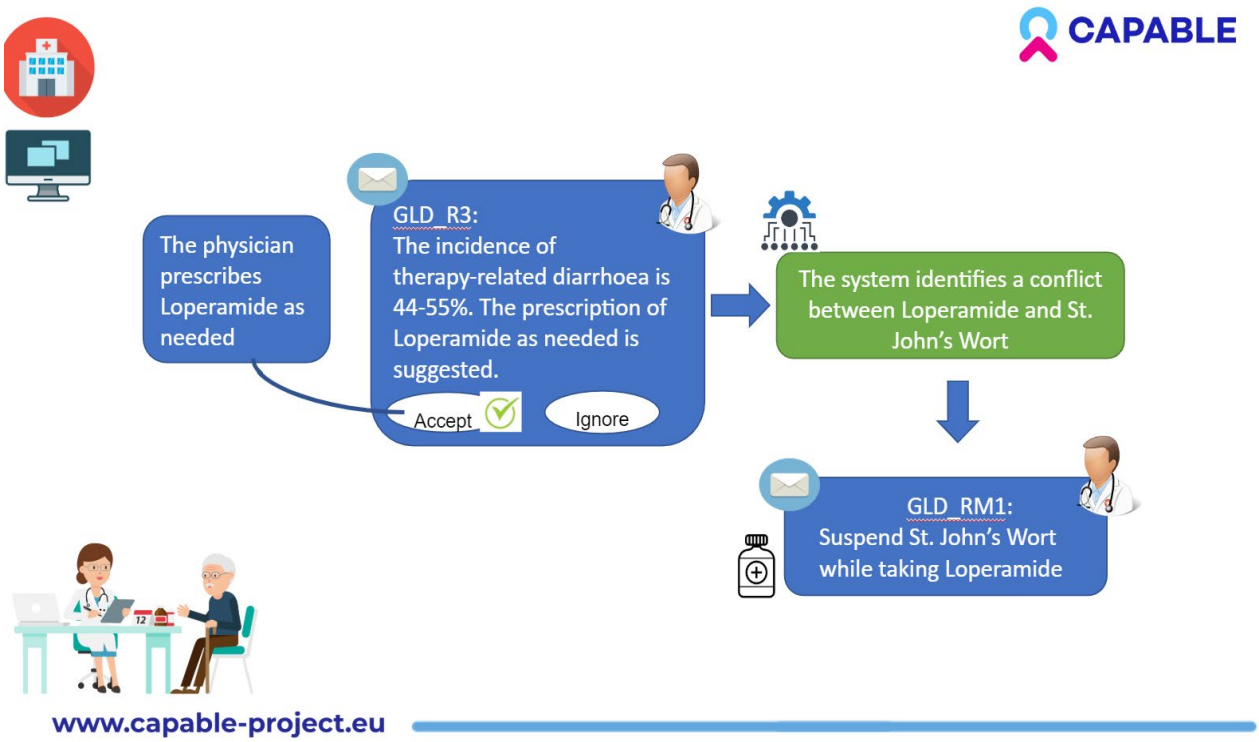

Figure 3. Day 0 - Enrollment visit - Part 2

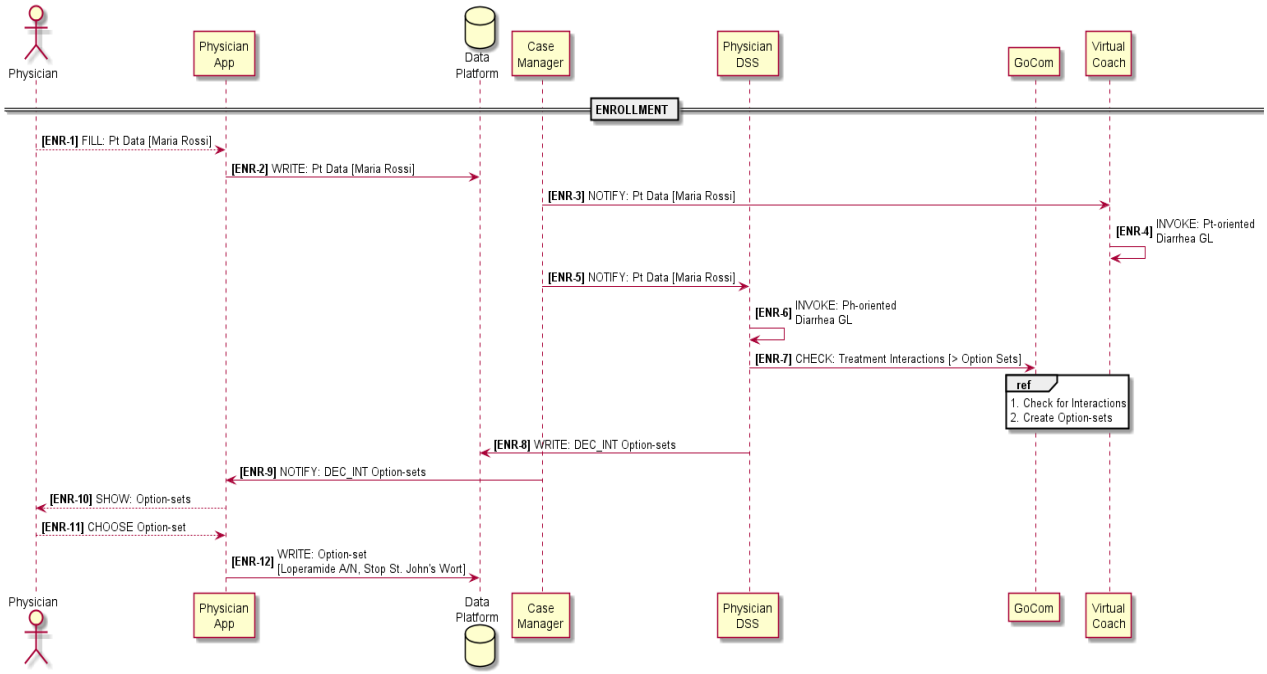

Figure 4. Day 0 - Enrollment visit - Sequence diagram

Physician, through Physician App, enrolls a new patient, Maria Rossi and inserts the following data: Name=Maria, Surname=Rossi, Date of birth=11/11/1954, Gender=Female. The system CAPABLE assigns an internal ID (CapablePatientID) to the patient.

Moreover, the physician collects a set of essential preliminary data needed by the CAPABLE system. In particular the physician records the following data: Sleep Problem=True; Years as a smoker=0; Weight=62, Height=160, BMI=24.2. Then, the physician collects additional information related to physical activity, psychological status and nutrition, and fills

the clinical history with the following data: Diabetes=False; Hypertension=False; Collagen vascular disease=False; Inflammatory bowel disease=False; Previous intestinal surgery=False.

At this stage the physician also collects and stores into the system Maria's current treatment both for her main cancer and for side effects/other conditions: Ongoing cancer medication list=Sunitinib+Nivolumab; Other treatments/ Ongoing non cancer medication list=St. John's Wort.

Both Virtual Coach and Physician DSS are notified about enrolling Maria. Virtual Coach starts the patient-oriented part of the diarrhea guideline and waits until relevant symptoms are reported by the patient. The Physician DSS evaluates patient treatment, checks the risk of diarrhea as a side effect of Nivolumab and activates the physician-oriented part of the guideline. The guideline recommends prescribing Loperamide as needed (A/N). and Physician DSS requests GoCom to check for possible interactions between Loperamide and other drugs taken by the patient.

GoCom identifies possible drug-drug interactions, and sends the physician DSS an option-set with two recommendations:

- GLD_R3: The incidence of therapy-related diarrhea is 44-55%. A prescription for Loperamide as needed (A/N) is suggested.
- GLD_RM1: Stop St. John's-Wort while taking Loperamide

The Physician DSS presents this option set to the physician, through the Physician App. The physician accepts the proposed option set and is asked to enter a new prescription for Loperamide A/N.

Finally, the physician selects, among the different capsule types that CAPABLE can deliver to Maria (thanks to the Virtual Coach), those that better cope with her experienced problems.

Once Maria has been enrolled, Patient App is installed on the patient's smartphone and activated, i.e., linked to specific the patient in the Data Platform (CapableAppId linked to CapablePatientID).

4.2. Day 0: Patient at home

A high-level overview of interaction that Maria has with the CAPABLE system at her home, is given in Figure 5. Moreover, a corresponding sequence diagram illustrating interactions between relevant CAPABLE components is given in Figure 6.

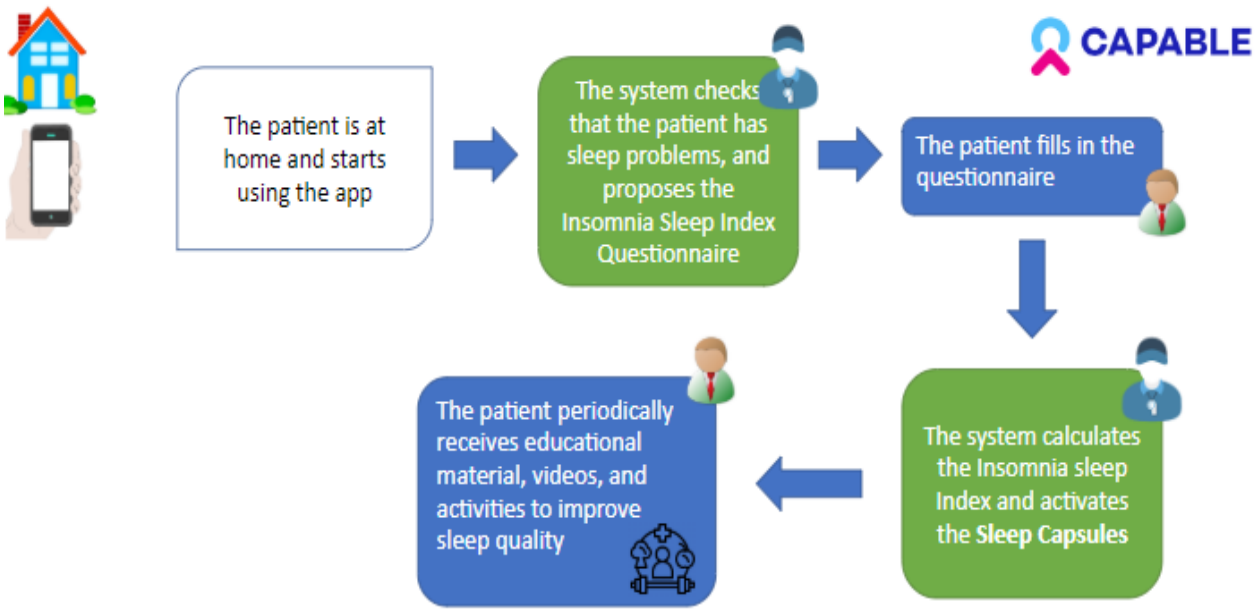

Figure 5. Day 0 - Patient at home

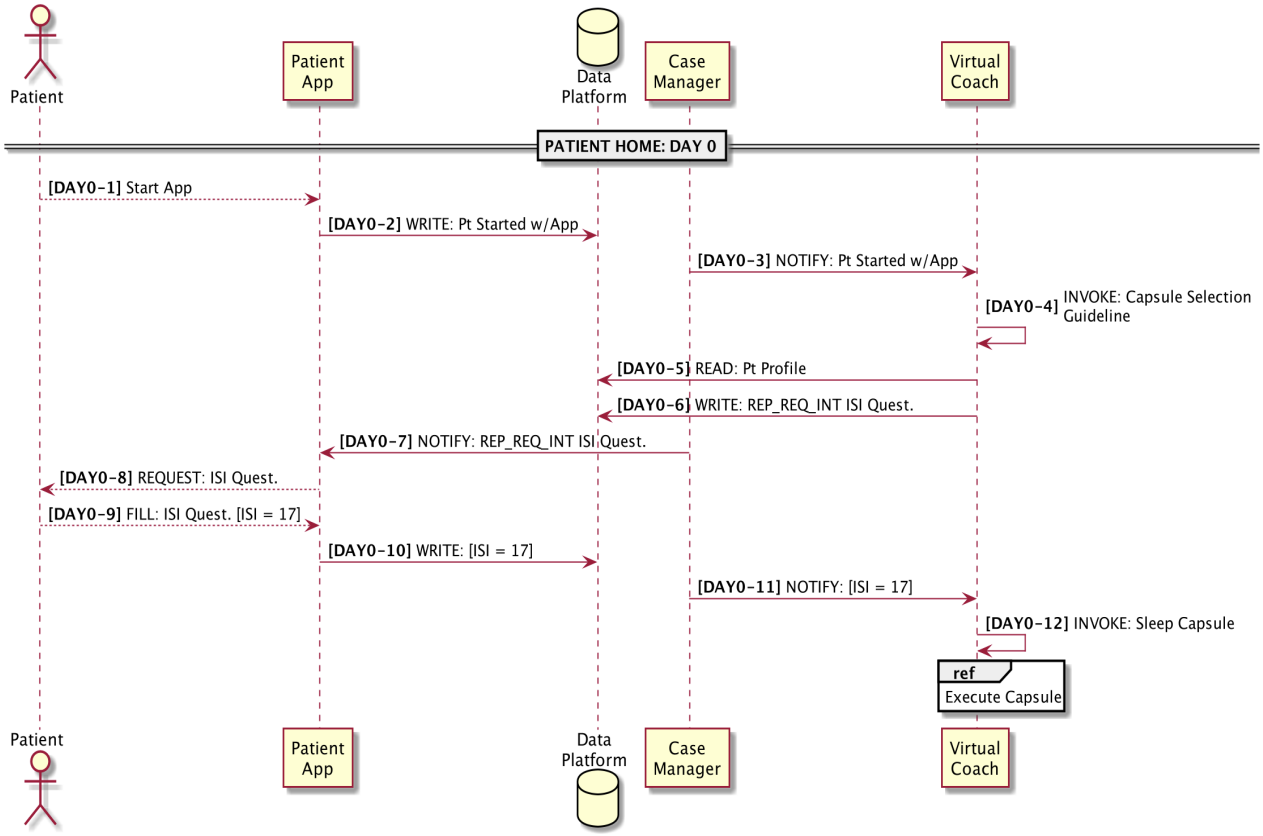

Figure 6. Day 0 - Patient at home - Sequence diagram

Maria starts the app for the first time at home. In response Virtual Coach uses a dedicated guideline (capsule selection guideline) to identify specific capsules among the ones approved by the physician and then activates these capsules. First, it retrieves Maria's patient profile from Data Platform. Since the profile indicates sleep problems (Sleep Problem =

True), Virtual Coach sends a reporting request intervention to fill the Insomnia Severity Index (ISI) questionnaire to the Patient App). Maria through the app interface fills the questionnaire -- the ISI value is 17 which indicates "clinical insomnia moderate intensity". Case Manager notifies the Virtual Coach about the ISI value being available. Virtual Coach follows the capsule selection guideline and according to an embedded rule (ISI >= 15) activates the sleep capsule (with imagery training) for improving Maria's sleep.

4.3. Day 1: Patient at home

A high-level overview of interaction that Maria has with the CAPABLE system during Day 1, is given in Figure 7. Moreover, a sequence diagram illustrating interactions between relevant CAPABLE components is given in Figure 8.

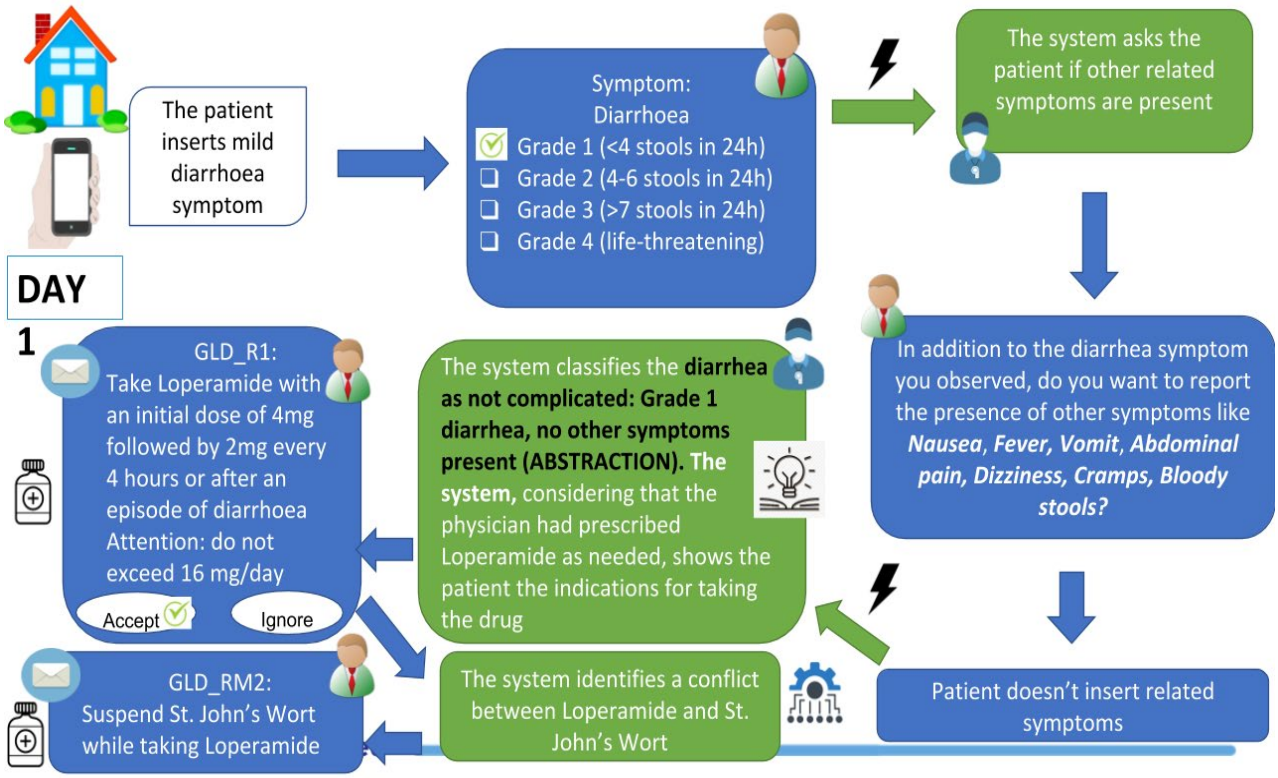

Figure 7. Day 1 - Patient at home

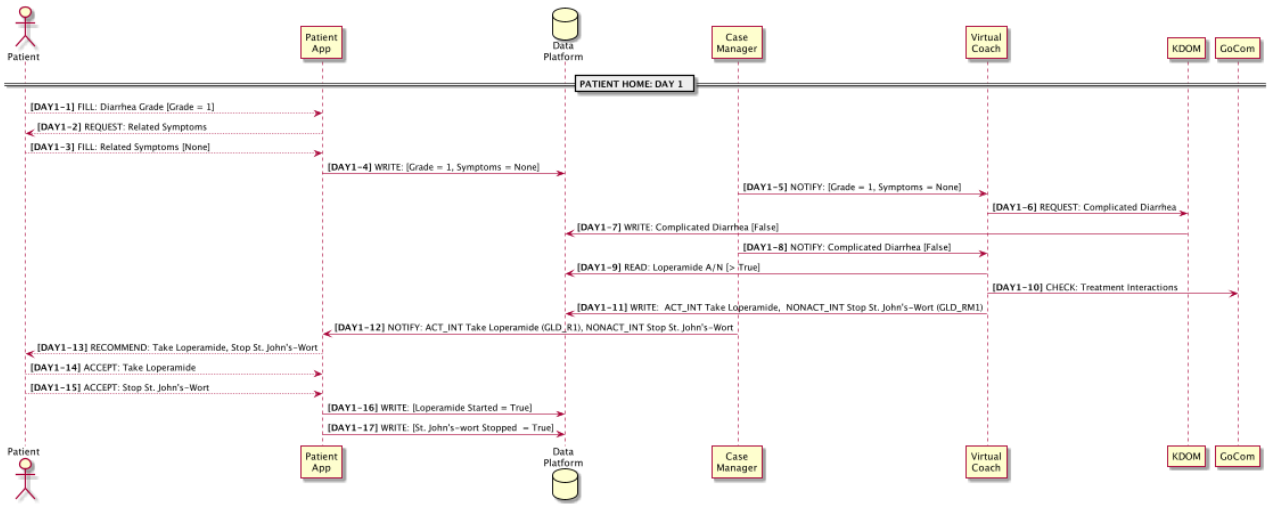

Figure 8. Day 1 - Patient at home - Sequence diagram

Maria uses the Patient App to report symptoms and she enters diarrhea grade 1. The Patient App asks for additional related symptoms and Maria reports none of them. Virtual Coach is notified about reported symptoms and it requests KDOM to compute the *Complicated Diarrhea* abstraction. KDOM computes and stores the result of this abstraction in the Data Platform (Complicated Diarrhea= False). Case Manager notifies Virtual Coach about the abstraction value being available.

Virtual Coach checks in the Data Platform whether Loperamide A/N has been prescribed and then consults the guideline -- since the following condition is satisfied: Complicated Diarrhea = False AND Loperamide A/N Prescribed = True, it stores the proposed "Take Loperamide" recommendation (GLD_R1) in the Data Platform. Virtual Coach then invokes GoCom to check for interactions between Loperamide and other drugs. GoCom reports back conflict with St. John's Wort, thus the Virtual Coach stores the combined recommendation to take Loperamide (GLD_R1) and to stop St. John's Wort (GLD_RM2).

The Patient App is notified by the Case Manager and displays these recommendations to Maria (Take Loperamide with an initial dose of 4mg followed by 2mg every 4 hours or after an episode of diarrhea. Attention: do not exceed 16 mg/day, stop St. John's Wort). Maria accepts the interventions: she confirms that she stopped taking St. John's Wort and starts taking Loperamide. This information is stored in the Data Platform.

4.4. Day 2: Patient at home

A high-level overview of interaction that Maria has with the CAPABLE system during Day 2, is given in Figure 9. Moreover, a sequence diagram illustrating interactions between relevant CAPABLE components is given in Figure 10.

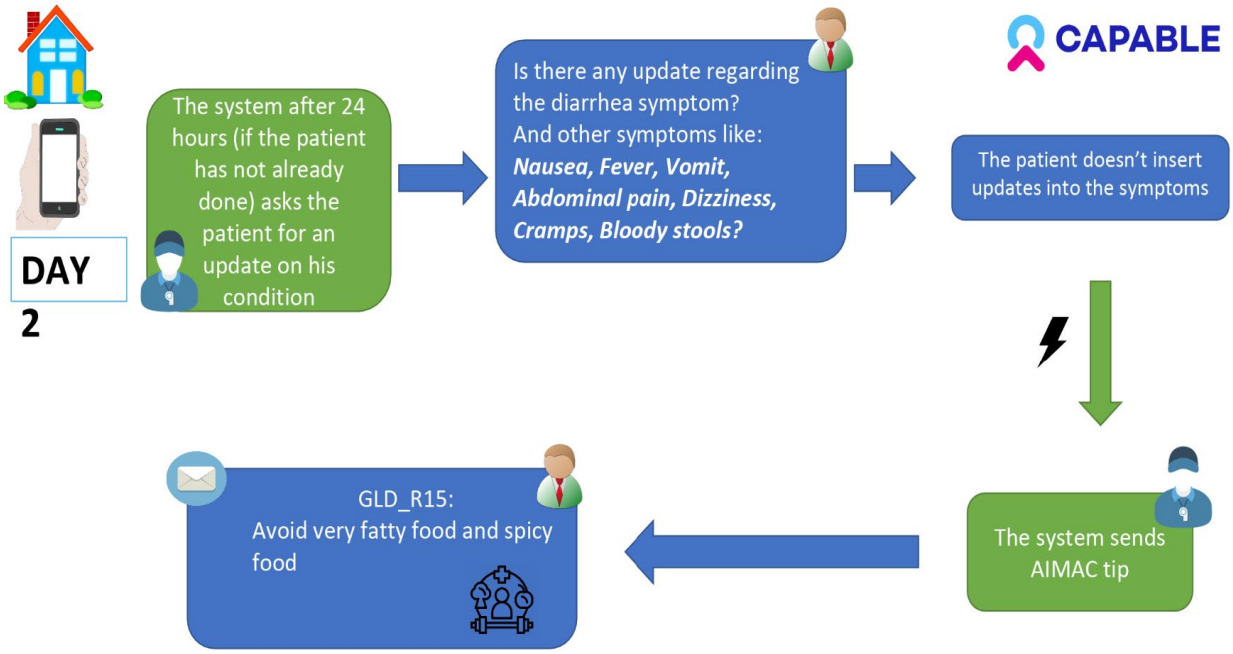

Figure 9. Day 2 - Patient at home

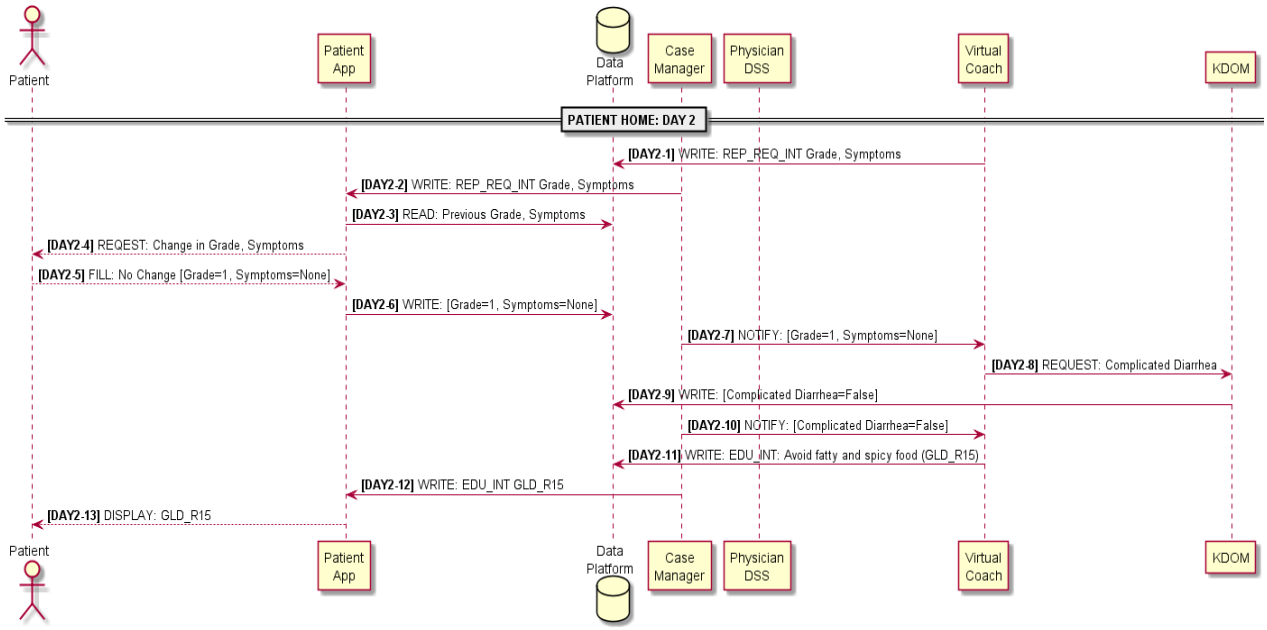

Figure 10. Day 2 - Patient at home - Sequence diagram

Virtual Coach after 24 hours stores reporting request intervention "Ask for update". The Patient App displays a reporting request intervention "Ask for update" (*Is there any update regarding the diarrhea symptom? And other symptoms like: Nausea, Fever, Vomit, Abdominal pain, Dizziness, Cramps, Bloody stools?*) after being notified by the Case Manager. Since there was no change in her state, Maria does not update the diarrhea grade and related symptoms (i.e., diarrhea grade is 1 and there are no related symptoms) and the previous values become the current ones.

Patient App stores current diarrhea grade and related symptoms in the Data Platform and Case Manager notifies Virtual Coach about these results. Virtual Coach asks KDOM to compute *Complicated Diarrhea* abstraction based on new values -- as previously, it is False. Then, Virtual Coach stores Educational Intervention (GLD_R15) with an AIMAC tip. The Patient App displays this intervention to Maria (*Avoid very fatty food and spicy food*), after being notified by Case Manager.

4.5. Day 3: Patient at home

A high-level overview of interaction that Maria has with the CAPABLE system during Day 3, is given in Figure 11. Moreover, a sequence diagram illustrating interactions between relevant CAPABLE components is given in Figure 12.

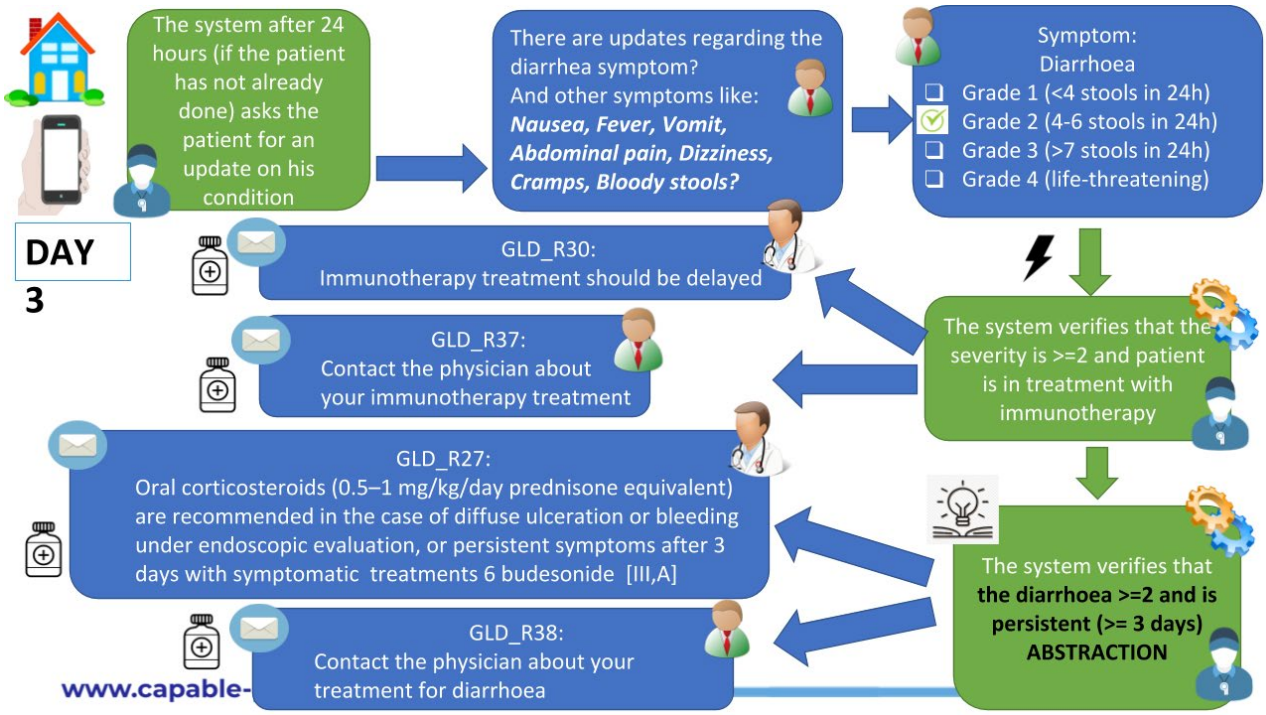

Figure 11. Day 3 - Patient at home

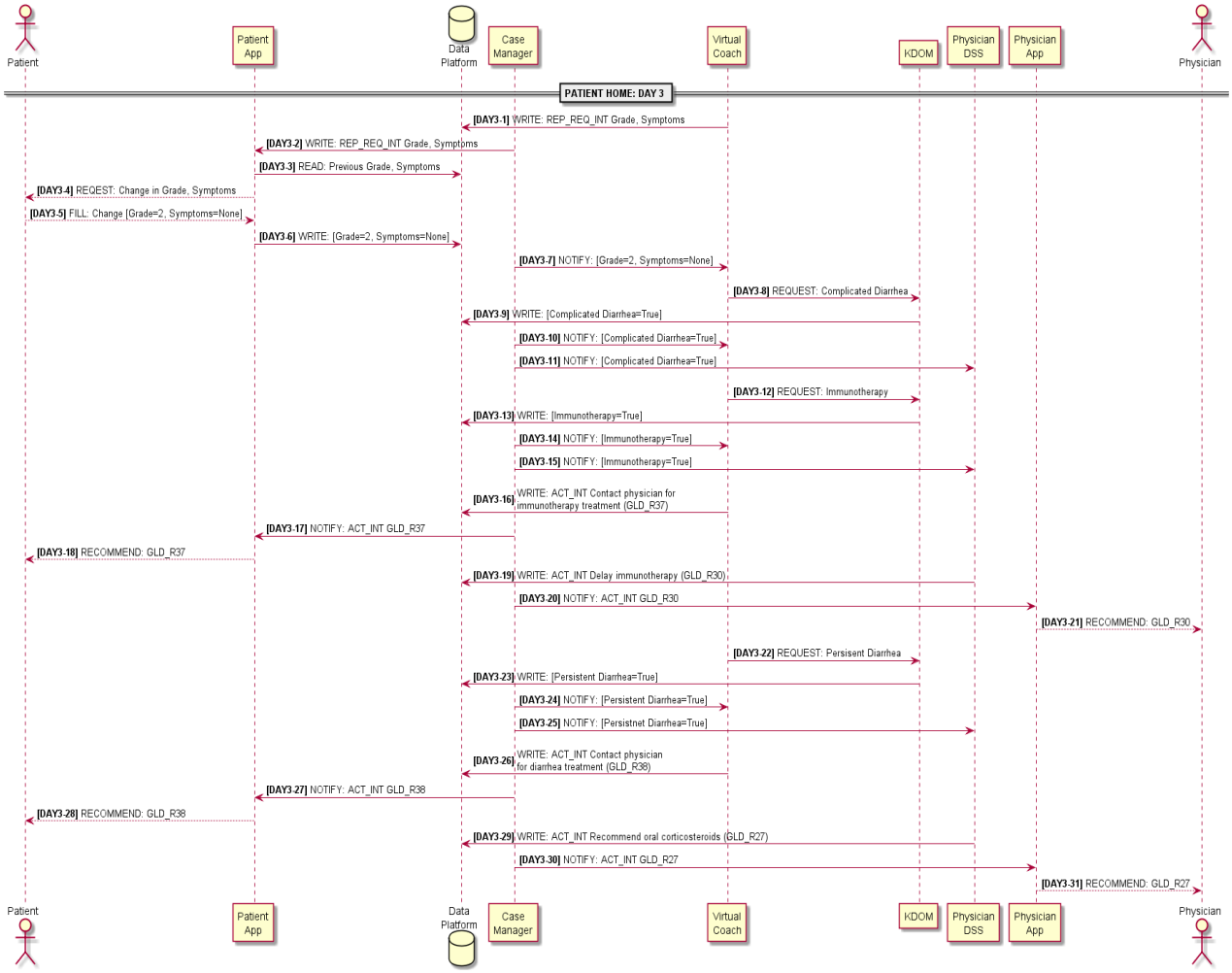

Figure 12. Day 3 - Patient at home - Sequence diagram

Virtual Coach after 24 hours generates another reporting request intervention and stores it in the Data Platform. The Patient App displays reporting request intervention "Ask for update" (*Is there any update regarding the diarrhea symptom? And other symptoms like: Nausea, Fever, Vomit, Abdominal pain, Dizziness, Cramps, Bloody stools?*) after being notified by the Case Manager). This time Maria reports diarrhea grade 2 and no related symptoms. Entered values are stored in the Data Platform and Virtual Coach is notified.

Virtual Coach asks KDOM to compute *Complicated Diarrhea*. KDOM computes the abstraction and returns the value True (Grade = 2 and Immunotherapy = True). Case Manager notifies Virtual Coach about the computed abstraction.

Virtual Coach additionally requests KDOM for the *Immunotherapy* abstraction (complicated diarrhea may be also indicated in other situations) -- the established value is True. Virtual Coach then stores the treatment intervention implied by the patient-oriented guideline (GLD_R37) in the Data Platform. The Patient App displays this intervention (*Contact the physician about your immunotherapy treatment*) to Maria after being notified by the Case Manager.

Physician DSS is also notified by the Case Manager about *Complicated Diarrhea* and *Immunotherapy* abstractions and following the physician-oriented guideline it stores an appropriate treatment intervention (GLD_R30). The Physician App displays GLD_R30 ("*Immunotherapy treatment should be delayed*"), after being notified by the case manager.

Subsequently, Virtual Coach asks KDOM for Persistent Diarrhea. KDOM computes this abstraction and returns the value True (duration of diarrhea >=3 days). The Virtual Coach is notified and then stores the treatment intervention (GLD_R38) suggested by the patient-oriented guideline. The Patient App displays this intervention ("Contact the physician about your treatment for diarrhea") after being notified by the Case Manager.

Physician DSS is also notified by the Case Manager that Persistent Diarrhea is True. As per the physician-oriented guideline, it stores another treatment intervention (GLD_R27). The Physician App displays this intervention ("Oral corticosteroids (0.5–1 mg/kg/day prednisone equivalent) are recommended in the case of diffuse ulceration or bleeding under endoscopic evaluation, or persistent symptoms after 3 days with symptomatic treatments ± budesonide [III, A]"), after being notified by Case Manager.

5. Differences between this document and the recorded Demo

The recorded Demo (link) lightly differs from the CAPABLE architecture presented in Section 3 and detailed scenario in Section 4; in particular:

- Figure 1 is an updated (more fine-grained) version of the diagram presented during the demo; specifically, we explicitly distinguish between Physician DSS and Deontics Engine instead of having a single PROforma block.
- In the Physician App we demonstrate how we collect data items that are not currently used by our decision support components (e.g., smoking, drinking, nutrition) and do not appear in the scenario presented in the document. However, such data will be used at later stages of the project.
- The Physician App does not present a single complex recommendation with an option set prepared by GoCom (prescribe loperamide and stop St. John's Wort), but splits the option set into separate recommendations. This is due by recent significant updates received both by GoCom and the Physician GUI, based on feedback from physicians.
- The recording focuses on major components of the CAPABLE system and some elements of the scenario, especially these that occur multiple times (symptom reporting on day 2 and presenting recommendations in Patient App on day 1) have been omitted for more concise presentation.

6. References

[1] Diarrhoea in Adult Cancer Patients: ESMO Clinical Practice Guidelines - Ann Oncol (2018) 29 (Suppl 4): iv126–iv142 - Authors: P. Bossi, A. Antonuzzo, N.I. Cherny, O. Rosengarten, S. Pernot, F. Trippa, U. Schuler, A. Snegovoy, K. Jordan & C.I. Ripamonti, on behalf of the ESMO Guidelines Committee